Linear Actuator

LAC Series

LAC1

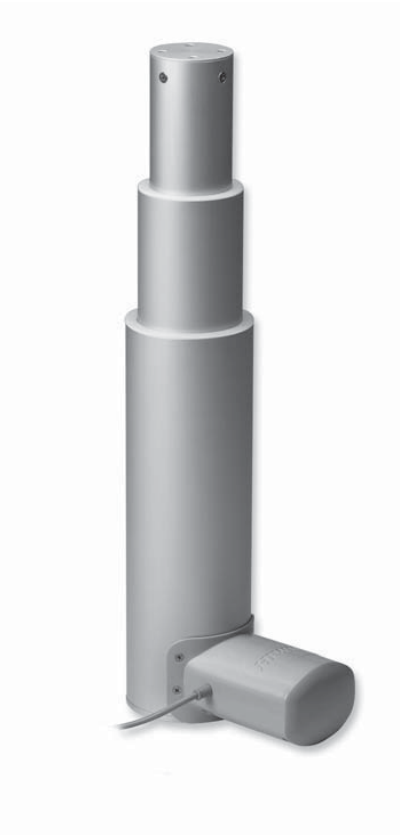

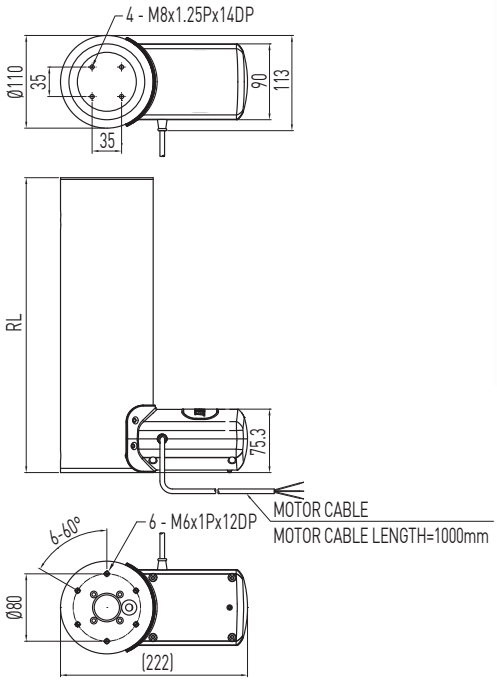

- RL:
  Stroke ≤ 300 , RL=310
  Stroke 301~400 , RL=360
  Stroke 401~500 , RL=410
  RL=Retracted length

Specifications

Screw type	ACME
Weight*	5.6kg
Protection	IP54
Compatible controller	Compatible with all controllers (*Notice the type of connector: Audio/DIN 4pin)
Working temp.	+5°C~40°C

* Stroke length 400mm

Option:

(1) Hall sensor
(2) Potentiometer 10k ohm
(3) Plug : DIN 4PIN plug / Stereo plug / Mono plug
(4) ULversion

LAC1 Specifications

Model	Thrust max. (N)	Pulling max. (N)	Holding max. (N)	Speed (mm / s) Load = Max. / Load = 0	Standard stroke (mm) : S			Duty cycle %	Current max. (A) 24VDC	Potentiometer Resolution (ohm/mm)	Hall Sensor Resolution (mm/pulse)
LAC1-1	2000	500	2000	8 / 12	300	400	500	10	5	6.67	0.064

* Min. input power = Voltage x Current max.

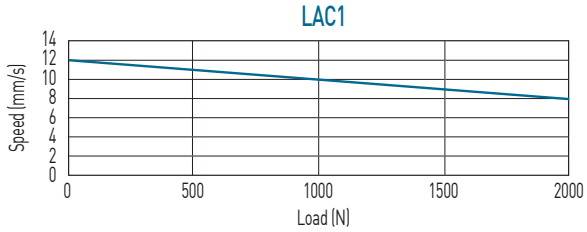

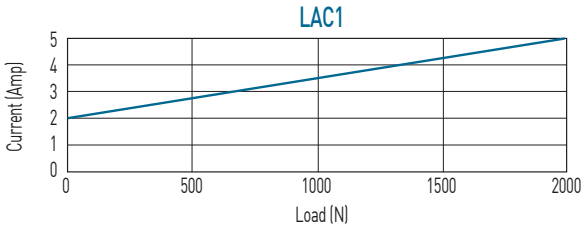

**Note: The test results are obtained by using the 24VDC power supply.

LAC1(24Q) Specifications

Model	Thrust max. (N)	Pulling max. (N)	Holding max. (N)	Speed (mm / s) Load = Max. / Load = 0	Standard stroke (mm) : S			Duty cycle %	Current max. (A) 24VDC	Potentiometer Resolution (ohm/mm)	Hall Sensor Resolution (mm/pulse)
LAC1-1	2000	500	2000	13/16	300	400	500	10	8	6.67	0.064

* Min. input power = Voltage x Current max.

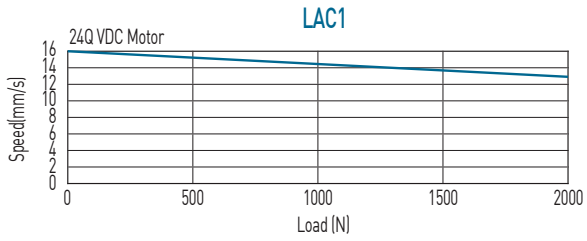

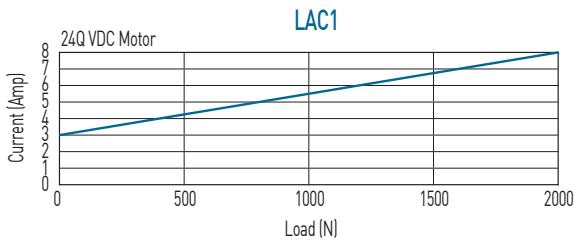

LAC1 Bending moment illustration

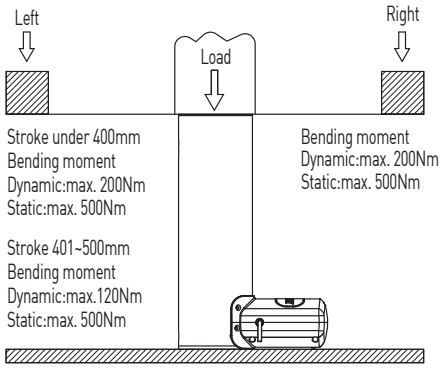

Ordering Information

LAC1 - 1 - 1 - 400 - 24 G E

Model number	1: Basic model complete with internal limit switches	Stroke length	Voltage	Color G : Gray	Special models according to the customer's requirement (Ignore this part of the serial number if not available)